SWIR Infrared Emitter

Model No. AL1301M-WRC

SWIR λp1300nm LED

RoHS compliant

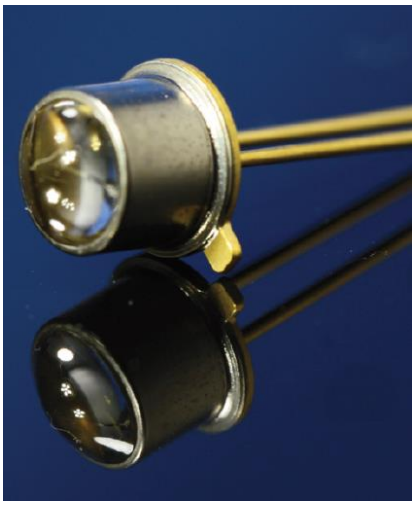

Peak Emission Wavelength : 1300nm
The 1300nm IR emitter series is designed for applications requiring precise optical / mechanical axis alignment and IR radiation in the SWIR range. Custom package solutions and sorting are available.

FEATURES

> Metal Can Package
> Narrow Beam Angle
> High Reliability

APPLICATIONS

> Bio Medical Applications
> Optical Sensors
> Optical Communications

◆ Absolute Maximum Ratings

Ta = 25℃

Items	Symbol	Value	Unit
Forward Current (DC)	I_F	100	mA
Forward Current (Pulse)*1	I_{FP}	1	A
Reverse Voltage (DC)	V_R	5	V
Power Dissipation	PD	100	mW
Operating Temperature Range	Topr	-25～+85	℃
Storage Temperature Range	Tstg	-30～+100	℃
Lead Soldering Temperature *2	Tls	260	℃

*1: Tw=10μsec, T=10msec; *2: Time 5 Sec max, Position: Up to 3mm from the body.

◆ Electrical - Optical Characteristics

Ta = 25℃

Items	Symbol	Value			Unit	Conditions
		Min.	Typ.	Max.		
Power Output	PO	--	5.3	--	mW	IF=50mA
Forward Voltage	VF	--	1.05	--	V	IF=50mA
Power Output	PO	--	2.8	--	mW	IF=20mA
Forward Voltage	VF	--	0.96	--	V	IF=20mA
Reverse Current	IR	--	--	100	μA	VR=5V
Peak Emission Wavelength	λp	--	1300	--	nm	IF=20mA
Spectral Line Half Width	Δλ	--	69	--	nm	IF=20mA
Half Intensity Beam Angle	θ	--	16	--	deg	IF=20mA

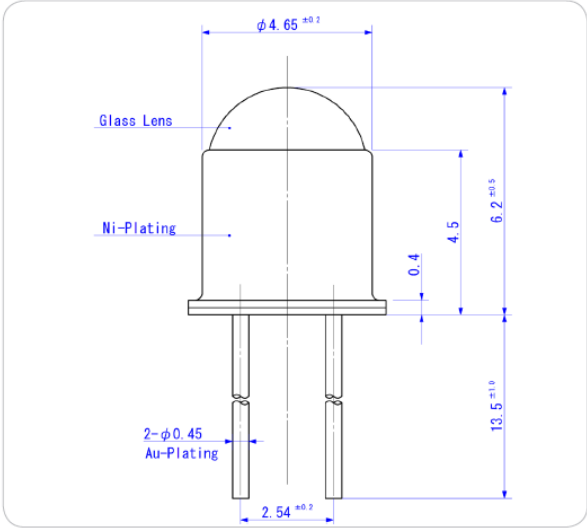

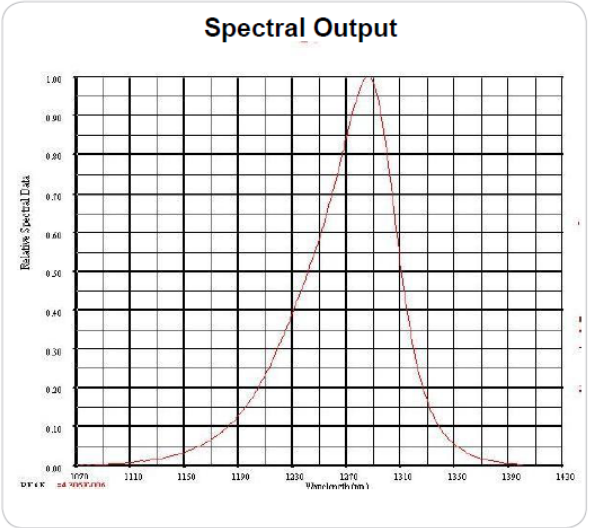

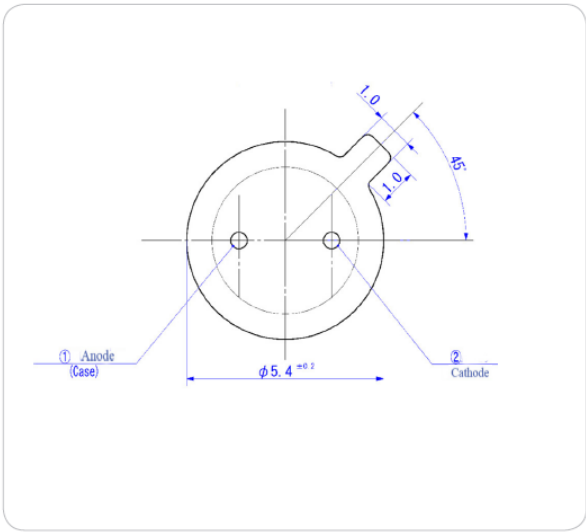

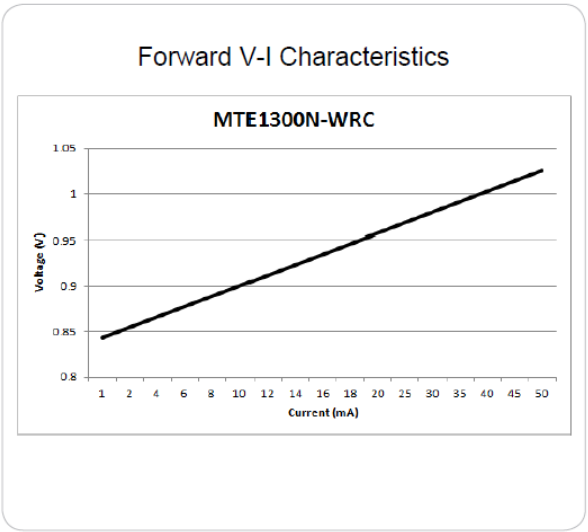

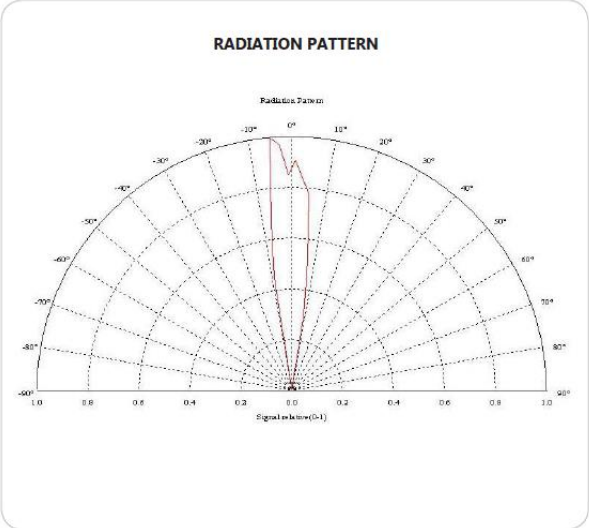
RADIATION PATTERN

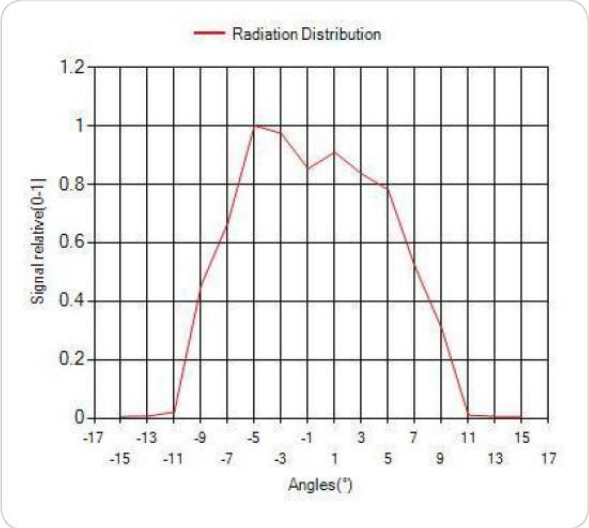
Radiation Distribution
Signal relative(0-1)
1.2
1
0.8
0.6
0.4
0.2
0
-17 -13 -9 -5 -1 3 7 11 15
-15 -11 -7 -3 1 5 9 13 17
Angles(°)